Team Alpha

Bop-It! Project Update Presentation

Jessica Huang, Jannet Trabelsi, Thomas Eble

What is a Qubit?

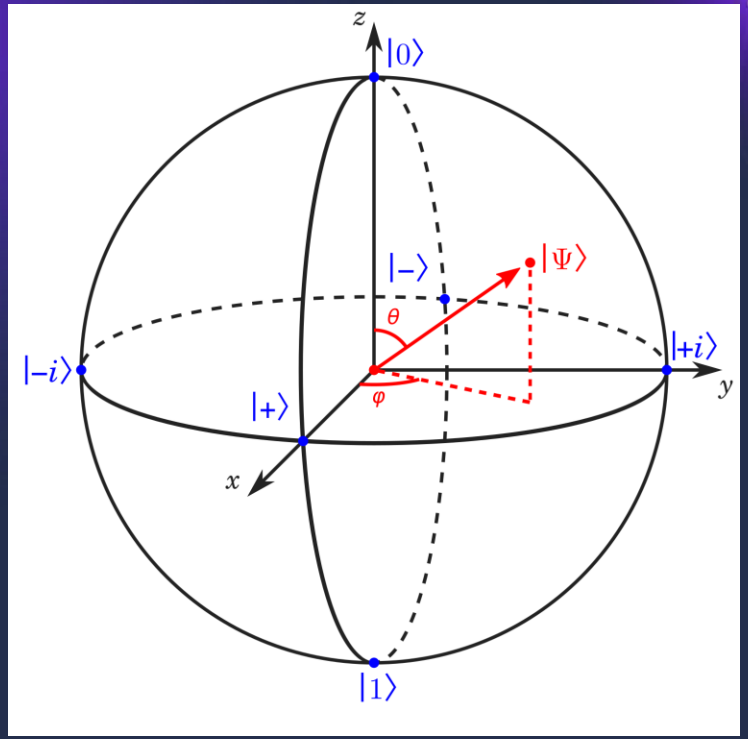

Z Measurement

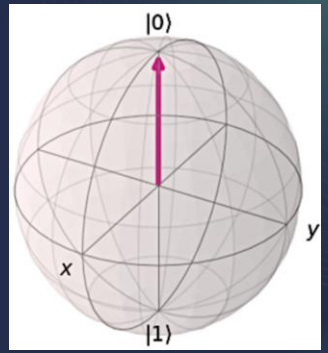

OR

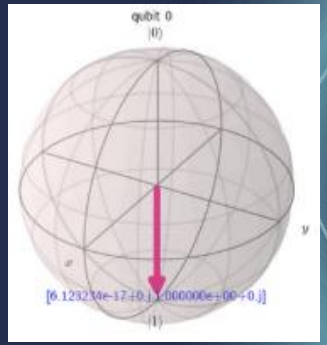

What is a Qubit?

X Gate

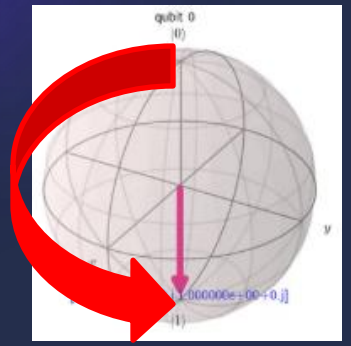

Y Gate

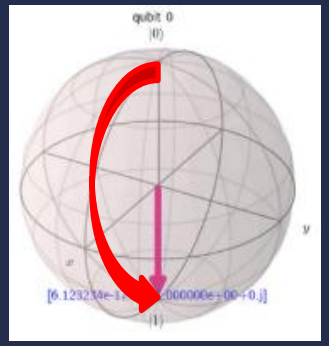

Z Gate

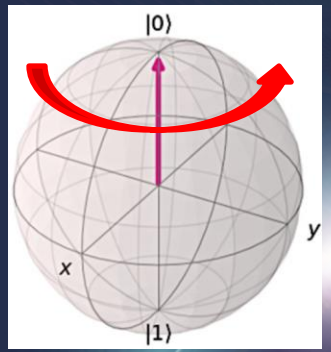

Our version of Bop-It….Qub-It!

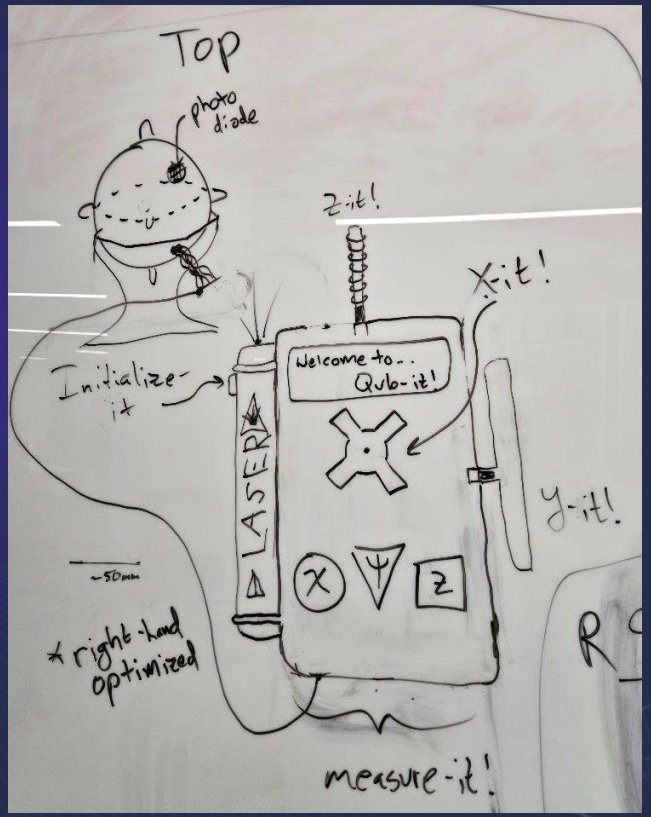

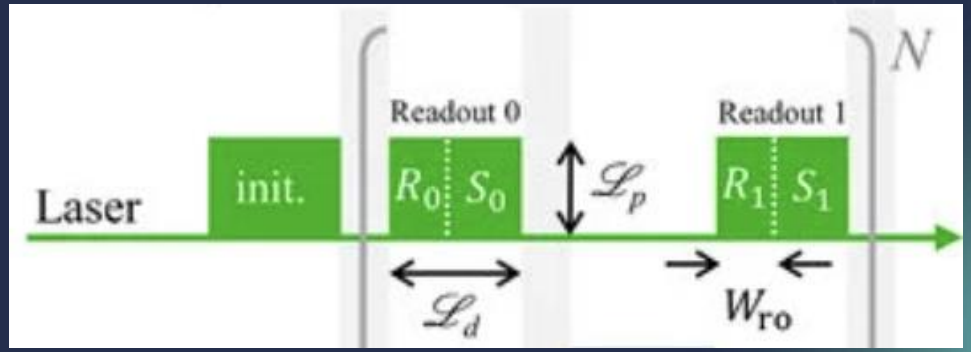

Progress (Start to Now)

- Initial sketch during brainstorming:

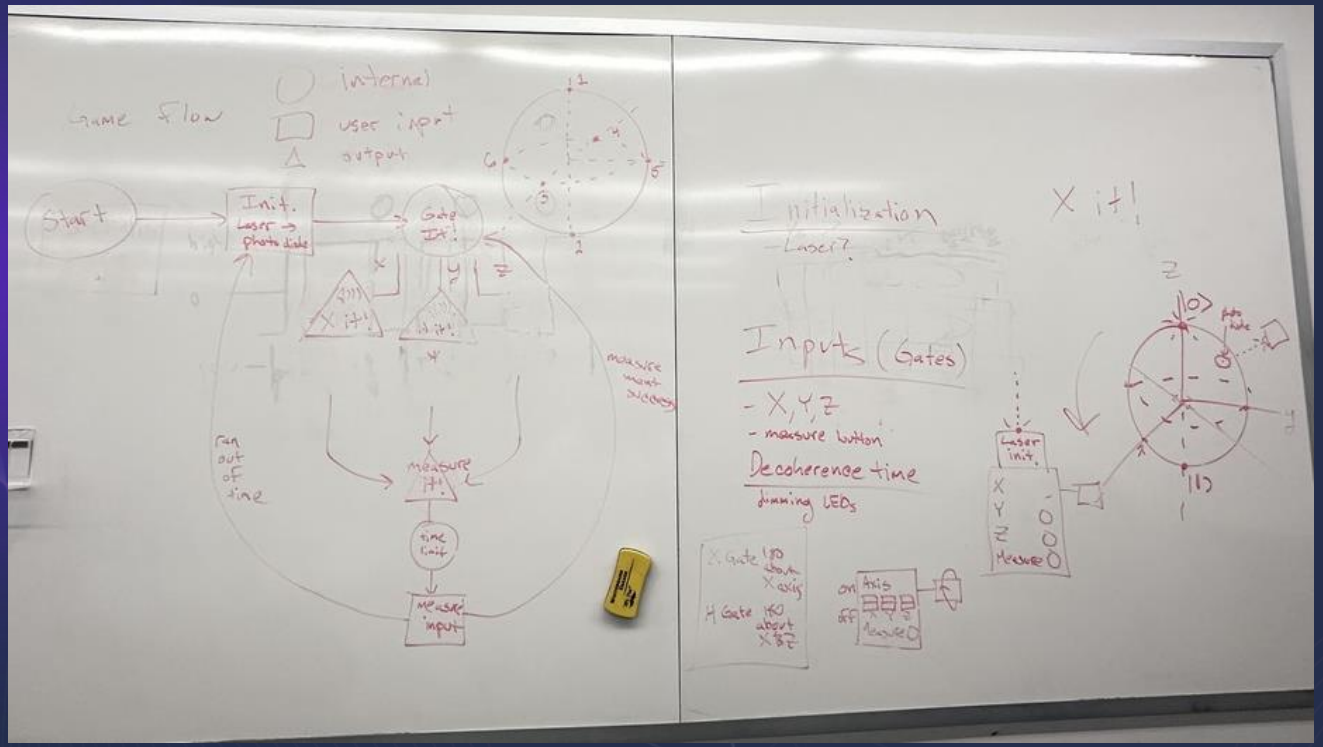

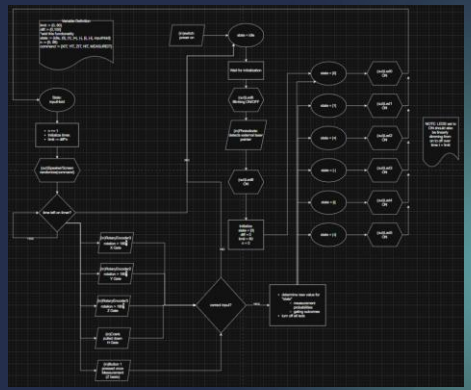

Breadboard prototypes

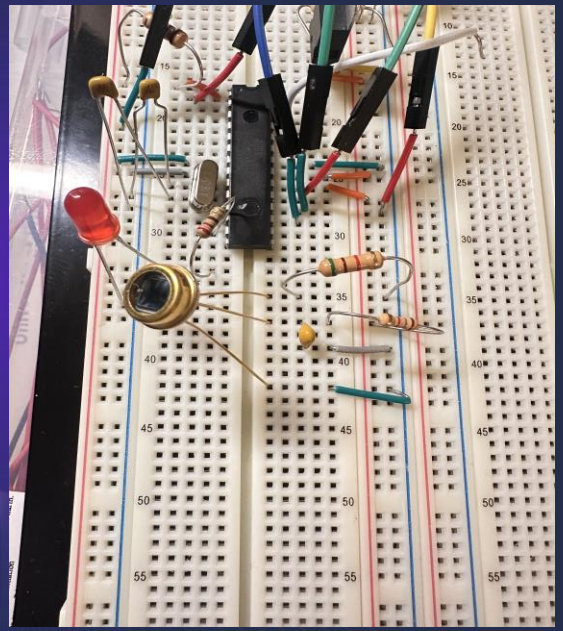

Photodiode

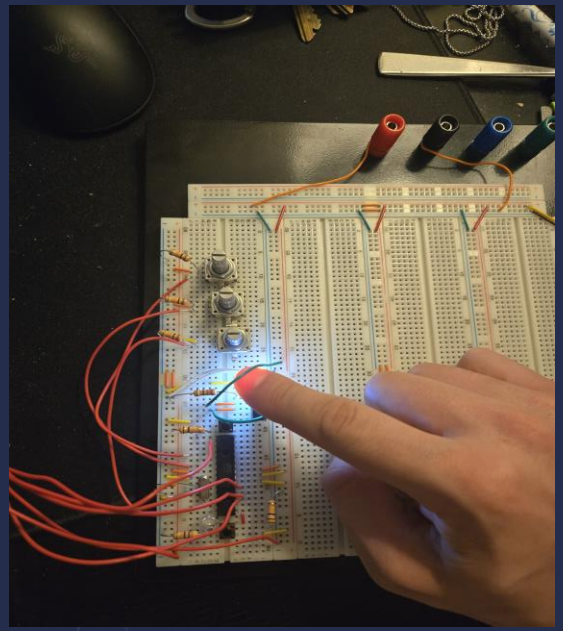

Rotary encoders

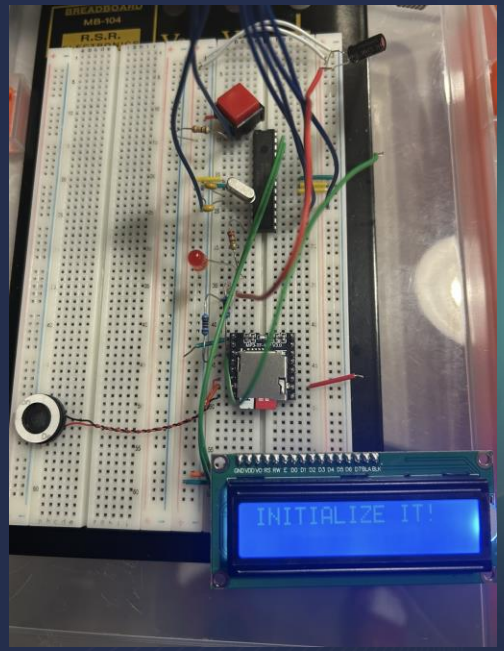

LCD, audio, and LED dimming

Programming

PINOUT:
DIO 0:AUDIO
DIO 1: AUDIO
DIO 2: ROT ENC
DIO 3: LED Z+
DIO 4: ROT ENC
DIO 5: LED X+
DIO 6: LED X-
DIO 7: ROT ENC
DIO 8:
DIO 9: LED Z-
DIO 10: LED Y+
DIO 11: LED Y-
DIO 12:
DIO 13:
AI 0: BUTTON: Measure X
AI 1: BUTTON: Measure Y
AI 2: BUTTON: Measure Z
AI 3:PHOTODIODE
AI 4: LCD
AI 5: LCD

Atmega pinout planning

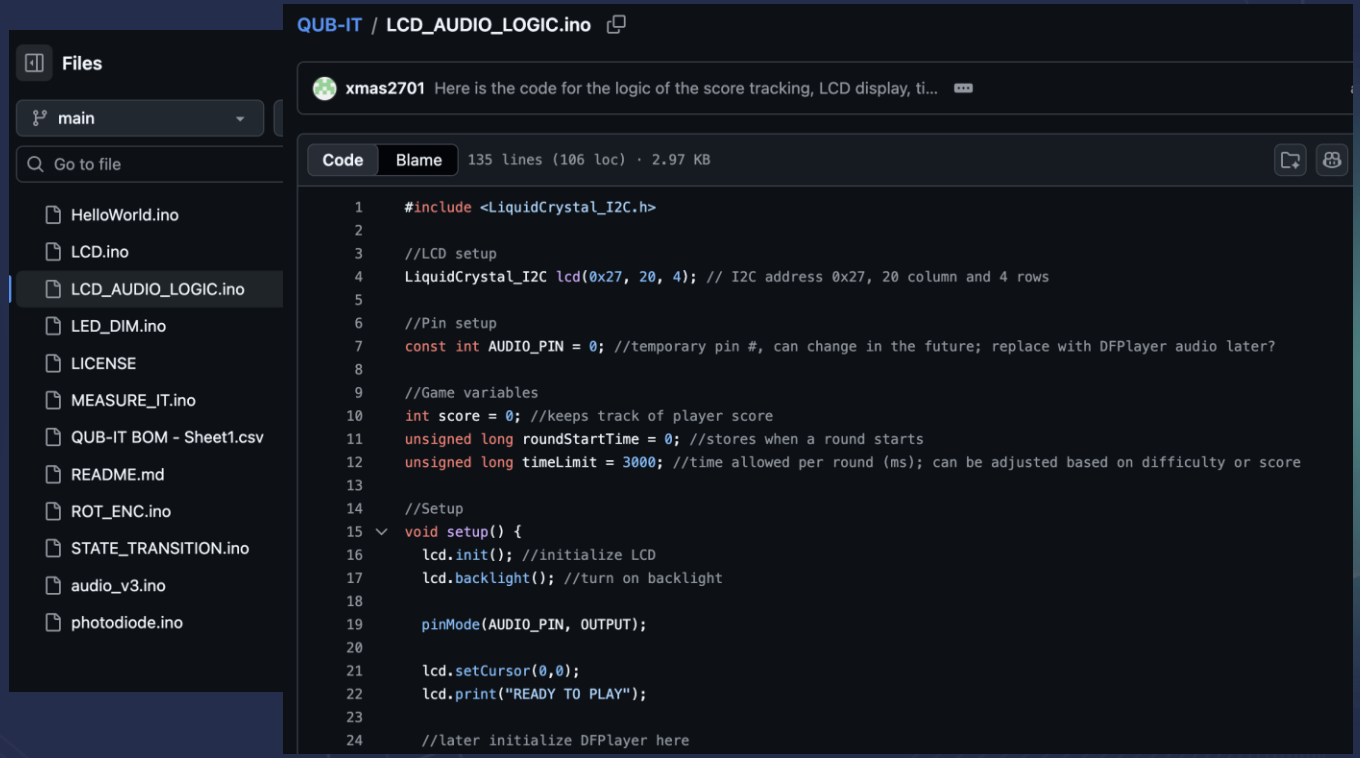

Team GitHub with Arduino code

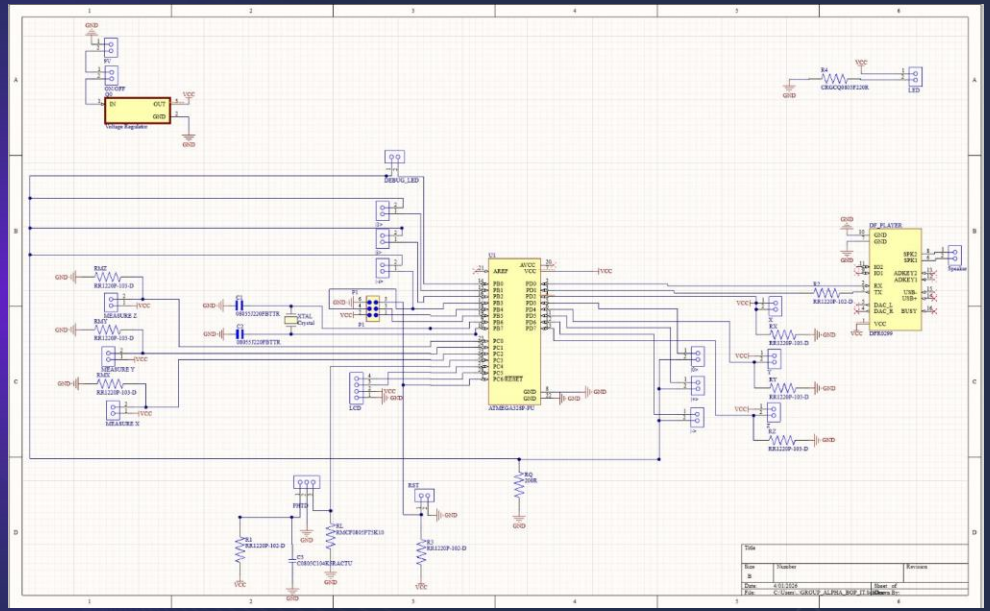

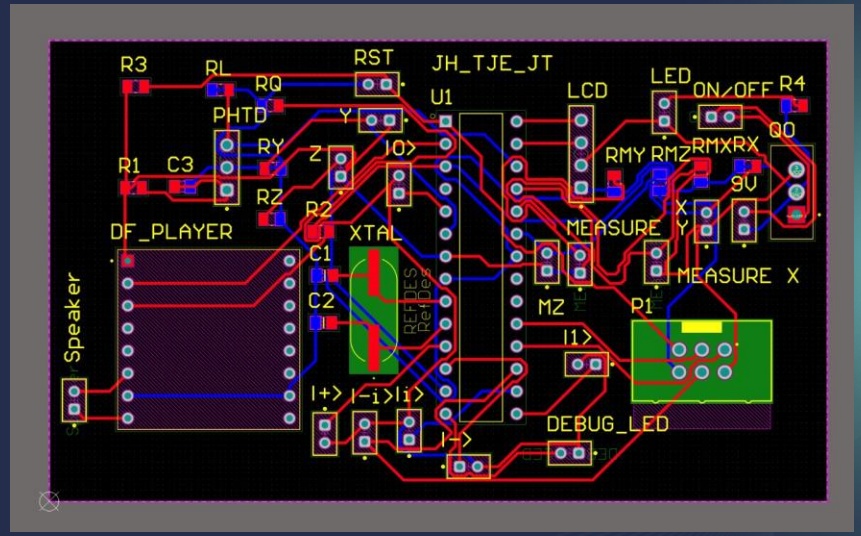
R3
RL
RQ
RST
JH_TJE_JT
U1
LCD
LED
ON/OFF
R4
PHTD
Y
RY
Z
IO>
RMY
RMZ
RMXRX
QO
R1
C3
RZ
R2
XTAL
9V
X
Y
DF_PLAYER
C1
MEASURE
MEASURE X
C2
MZ
P1
Speaker
I1>
I+>
I-i>
Ii>
I->
DEBUG_LED

CAD Enclosure

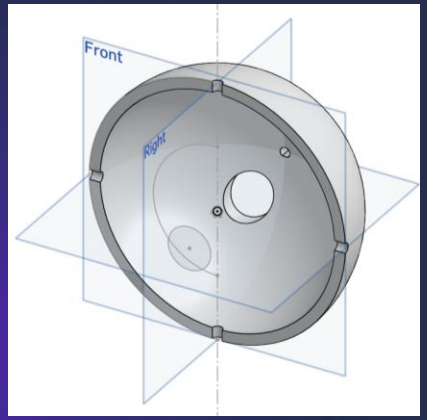

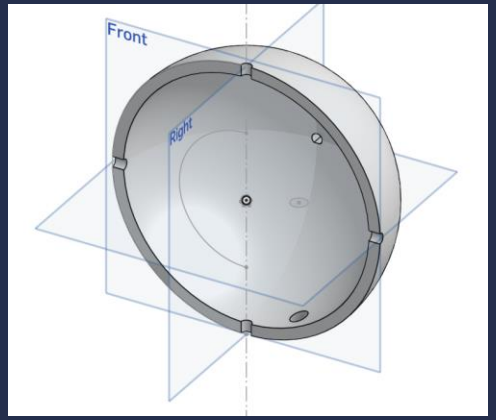

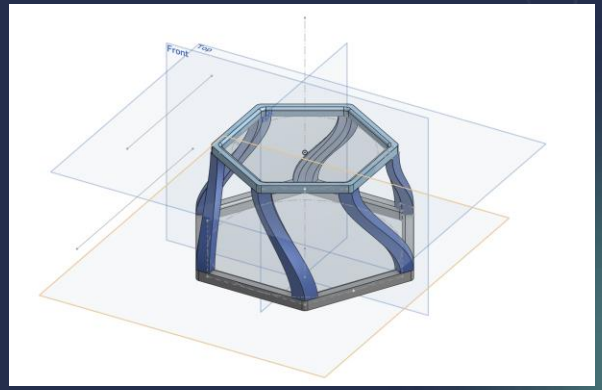

What we still need to work on…

- Design PCB enclosure/main Bop-It toy
- Combine gating logic with dimming logic and Bop-It game functionality
- Solder PCB
- Assemble QUB-IT!
- If time permitting…
  - Enclosure improvements: better aesthetics, stronger plastic/resin
  - Addition of an H gate and the various code and board adjustments that come with it